NYCA IRM Requirement Study 2027-2028 Final Base Case (FBC) Model Assumptions Matrix

Draft V1.0

NYSRC

Installed Capacity Subcommittee Meeting #322

September 29, 2026

Load Forecast

#	Parameter	2026-2027 Model Assumptions	2027-2028 Model Assumptions	Basis for Recommendation	Model Change
1a	Peak Load Forecast (Preliminary Base Case – Parametric & Sensitivities)	2025 Gold Book* NYCA: 32,163.0 MW NYC: 11,048.2 MW LI: 5,111.2 MW G-J: 15,298.2 MW	2026 Gold Book* NYCA: 32,024.4 MW NYC: 11,117.4 MW LI: 5,176.1 MW G-J: 15,460.4 MW	Most recent Gold Book Forecast is used for Preliminary Base Case (PBC) parametric study and sensitivity cases	N
1b	Winter Peak Load Forecast (Preliminary Base Case – Parametric & Sensitivities)	2025 Gold Book* NYCA: 25,093.0 MW NYC: 7,648.2 MW LI: 3,328.2 MW G-J: 10,766.3 MW	2026 Gold Book* NYCA: 25,254.4 MW NYC: 7,767.4 MW LI: 3,365.1 MW G-J: 11,020.4 MW	Most recent Gold Book Forecast is used for PBC parametric study and sensitivity cases	N
2a	Peak Load Forecast (Final Base Case)	October 2025 Fcst* NYCA: 31,648.2 MW NYC: 11,088.8 MW LI: 5,127.8 MW G-J: 15,304.8 MW (Attachment A1-a)	(Expected October 2026)	Updated Load Forecast in October will be used for Final Base Case (FBC)	N
2b	Winter Peak Load Forecast (Final Base Case)	October 2025 Fcst* NYCA: 24,522.6 MW NYC: 7,647.4 MW LI: 3,327.4 MW G-J: 10,775.4 MW (Attachment A1-b)	(Expected October 2026)	Updated Load Forecast in October will be used for FBC	N

* Behind-the-Meter Net Generation (BTM:NG) resource loads have been incorporated into these numbers.

Load Forecast

#	Parameter	2026-2027 Model Assumptions	2027-2028 Model Assumptions	Basis for Recommendation	Model Change
3	Load Shape (Multiple Load Shape)	Bin 1-2: 2013 Bin 3-4: 2018 Bin 5-7: 2017	Bin 1-2: 2013 Bin 3-4: 2018 Bin 5-7: 2017	ICS Recommendation	N
4a	Load Forecast Uncertainty (LFU)	Zonal Model to reflect current data with input from Con Ed and LIPA. (Attachment A2)	Zonal Model to reflect current data with input from Con Ed and LIPA. (Attachment A2)	Based on TO and NYISO data analysis	N
4b	LFU Winter	Attachment A3	Attachment A3	Based on TO and NYISO data analysis	N
5a	Annual Energy Forecast (Preliminary Base Case)	2025 Gold Book NYCA: 155,460 GWh NYC: 50,100 GWh LI: 20,040 GWh (Attachment A4)	2026 Gold Book NYCA: 155,030 GWh NYC: 50,670 GWh LI: 20,050 GWh (Attachment A4)	Production of load shapes are aligned with the annual energy forecast as per the Enhanced Load Modeling Whitepaper. Updated with most recent Gold Book Forecast.	N
5b	Annual Energy Forecast (Final Base Case)	October 2025 Fcst NYCA: 152,996.0 MW NYC: 50,252.4 MW LI: 20,376.3 MW (Attachment A4)	(Expected October 2026)	Updated Load Forecast in October will be used for Final Base Case (FBC)	N

Generation Parameters

#	Parameter	2026-2027 Model Assumptions	2027-2028 Model Assumptions	Basis for Recommendation	Model Change
6a	Modeled ICAP – Summer*	NYCA: 42,404.70 MW NYC: 10,492.21 MW LI: 6,061.71 MW G-J: 15,293.45 MW	NYCA: 42,541.14 MW NYC: 10,437.77 MW LI: 5,897.17 MW G-J: 14,693.85 MW	Based on modeled capacities of all NYCA resources, excluding imports from and exports to External Control Areas	N
6b	Modeled ICAP – Winter*	NYCA: 41,895.83 MW NYC: 9,745.54 MW LI: 6,494.56 MW G-J: 14,757.43 MW	NYCA: 42,004.74 MW NYC: 9,725.76 MW LI: 6,331.44 MW G-J: 14,133.09 MW	Based on modeled capacities of all NYCA resources, excluding imports from and exports to External Control Areas	N
7	Existing Generating Unit Capacities	2025 Gold Book Values. Use min. (DMNC vs. CRIS) capacity value	2026 Gold Book Values. Use min. (DMNC vs. CRIS) capacity value	Latest Gold Book publication	N
8	Proposed New Units (Thermal) and re-ratings	0 MW new units or re-ratings for Thermal resources (Attachment B1)	75.5 MW new units or re-ratings for Thermal resources (Attachment B1)	NYISO recommendation based on documented process that includes the latest Gold Book publication, NYISO interconnection queue, and generation notifications	N
9	Deactivations and Removals	114 MW generator deactivations and removals (Attachment B2)	518.1 MW generator deactivations and removals (Attachment B2)	Latest Gold Book publication and generator notifications	N
10	Forced and Partial Outage Rates	Five-year (2020-2024) GADS data for each unit represented. Those units with less than five years – use representative data. (Attachment C1)	Five-year (2021-2025) GADS data for each unit represented. Those units with less than five years – use representative data. (Attachment C1)	Transition rates representing the Equivalent Demand Forced Outage Rates (EFORd) during demand periods over the most recent five-year period	N
11	Planned Outages	Planned Outages are removed from the IRM study	Planned Outages are removed from the IRM study	Based on 2022-2023 IRM study FBC	N

Generation Parameters

#	Parameter	2026-2027 Model Assumptions	2027-2028 Model Assumptions	Basis for Recommendation	Model Change
12	Maintenance	Nominal 50 MW – divided equally as 2 negative 25 MW units in Load Zones J and K, applied to the months of June-August	Nominal 65MW applied to the months of June-August and December-February. Divided as follows: Load Zone A: 10 MW Load Zone G: 15 MW Load Zone J: 15 MW Load Zone K: 25 MW	Review of historical planned maintenance data. Based on Maintenance Modeling whitepaper and NYSRC recommendation	Y
13	Combustion Turbine Derates	Derate based on temperature correction curves provided	Derate based on temperature correction curves provided	Operational history indicates the derates are in line with manufacturer provided curves	N
14	Existing and Proposed New Wind Units	151.6 MW of land-based wind capacity additions. 2,702.3 MW of qualifying wind. (Attachments B3 and G)	339.1 MW of land-based wind capacity additions. 3,035.7 MW of qualifying wind. (Attachments B3 and G)	ICAP based on clean energy standard (CES) agreements, interconnection queue and ICS input	N
15a	Land-Based Wind Shape	Actual hourly plant output over the period 2020-2024. New units will use zonal hourly averages or nearby units.	Actual hourly plant output over the period 2021-2025. New units will use zonal hourly averages or nearby units.	Program randomly selects a wind shape of hourly production from the most recent five-year period for each model iteration	N
15b	Offshore Wind Shape	Normalized offshore wind shapes as published by NYISO over the period 2020-2024	Normalized offshore wind shapes as published by NYISO and actual hourly plant output over the period 2021-2025	Program randomly selects a wind shape of hourly production from the most recent five-year period for each model iteration	N
16	Existing and Proposed New Solar Resources	0 MW of utility-scale solar capacity additions totaling 573.4 MW of qualifying solar capacity. (Attachments B3 and G2)	800 MW of utility-scale solar capacity additions totaling 1,371.4 MW of qualifying solar capacity. (Attachments B3 and G2)	ICAP based on CES agreements, interconnection queue and ICS input	N
17	Solar Shape	Actual hourly plant output over the period 2020-2024. New units will use zonal hourly averages or nearby units.	Actual hourly plant output over the period 2021-2025. New units will use zonal hourly averages or nearby units.	Program randomly selects a solar shape of hourly production from the most recent five-year period for each model iteration	N

Generation Parameters

#	Parameter	2026-2027 Model Assumptions	2027-2028 Model Assumptions	Basis for Recommendation	Model Change
18	BTM:NG Program	No new BTM:NG resources, total Net ICAP of 265.2 MW (361.8 MW Gen, 96.6 MW Load) (Attachment B5)	No new BTM:NG resources, total Net ICAP of 209.4 MW (353.8 MW Gen, 144.4 MW Load) (expected update in October 2026) (Attachment B5)	Both the generation of the participating resources and the full host loads are modeled	N
19	Small Hydro Resources	Actual hourly plant output over the period 2020-2024	Actual hourly plant output over the period 2021-2025	Program randomly selects a hydro shape of hourly production from the most recent five-year period for each model iteration	N
20	Large Hydro	Probabilistic model based on five years of GADS data (2020-2024)	Probabilistic model based on five years of GADS data (2021-2025)	Transition rates representing the EFORd during demand periods over the most recent five-year period	N
21	Landfill Gas (LFG)	Actual hourly plant output over the period 2020-2024	Actual hourly plant output over the period 2021-2025	Program randomly selects an LFG shape of hourly production from the most recent five-year period for each model iteration	N
22	New Energy Storage Resources (ESRs)	18 MW of new battery storage scheduled. (Attachment B4) 35 MW of total battery storage modeled. (Attachment G6)	110 MW of new battery storage scheduled. (Attachment B4) 148 MW of total battery storage modeled. (Attachment G6)	ICAP based on NYSERDA/utility agreements, interconnection queue and ICS input	N
23	Energy Limited Resources (ELRs)	Based upon elections made by August 1st, 2025 ES and small EL3 output limitations lifted at HB14	Based upon elections made by August 1st, 2026 ES and small EL3 output limitations lifted at HB14	Existing elections are made by August 1st and will be incorporated into the model	N
24	Distributed Energy Resources (DERs)	480.5 MW of total DERs (Attachment B6)	340.5 MW of total DERs (Attachment B6)	Modeled MW based on MW value of DER Aggregations that have passed Distribution Utility review by April	N

Transactions- Imports and Exports

#	Parameter	2026-2027 Model Assumptions	2027-2028 Model Assumptions	Basis for Recommendation	Model Change
25	Capacity Purchases	Existing Rights: PJM – 1,080 MW, HQ – 1,190 MW in Summer, Varied (0 – 914 MW) in Winter. All contracts modeled as equivalent contracts.	Existing Rights: PJM – 1,080 MW, HQ – 1,190 MW in Summer, Varied (0 – 914 MW) in Winter. All contracts modeled as equivalent contracts.	Grandfathered Rights, Existing Transmission Capacity for Native Load (ETCNL), and other awarded long-term rights	N
26	Capacity Sales	Long Term firm sales Summer 266.7 MW	Long Term firm sales Summer 267.4 MW	Long term contracts	N
27	Forward Capacity Market (FCM) Sales from a Locality*	No sales modeled within study period	No sales modeled within study period	White paper, NYISO recommendation	N
28	Wheels through NYCA	300 MW HQ to ISO-NE equivalent contract	HQ to ISO-NE equivalent contract: 300 MW in Summer and 0 MW in Winter	HQ wheel has an ISO-NE capacity supply obligation for 2027-2028	N
29	New Unforced Capacity Deliverability Rights (UDRs)	Champlain Hudson Power Express: 1,250 MW new UDR from HQ to Load Zone J	No new UDRs identified	Existing UDR elections are made by August 1st and will be incorporated into the model for FBC	N
30	New External Deliverability Rights (EDRs)	No new EDRs identified	No new EDRs identified	Review of most recent data Per NYSRC recommendation	N

* Final FCM sales that will materialize are unknowable at the time of the IRM study. To reflect the impact these sales have on reliability, the NYISO applies a Locality Exchange Factor in the market.

Topology

#	Parameter	2026-2027 Model Assumptions	2027-2028 Model Assumptions	Basis for Recommendation	Model Change
31	Interface Limits	Updates to the Dysinger East forward limit, West Central reverse limit, Moses South forward limit, Central East forward limits, Sprain Brook Dunwoodie South forward limit, Long Island export limits, and Norwalk Harbor to Long Island import limit (Attachment E1)	Updates to the Dysinger East forward limit, West Central reverse seasonal limits, Moses South forward limit, UPNY-SENY group forward limit, UPNY-ConEd forward limit, Y49/Y50 forward and reverse seasonal limits, Jamaica Ties reverse seasonal limits, LI West reverse seasonal limits, and ConEd-LIPA group forward and reverse seasonal limits (Attachment E1)	Based on the 2026 NYISO Summer Operating Study, 2025-2026 NYISO Winter Operating Study, Seasonal Topology Whitepaper, 2026 Reliability Needs Assessment, 2025 UPNY-ConEd Voltage Collapse Transfer Limit Study, and Transmission Owners	Y
32	New Transmission	Addition of Smart Path Connect project	None identified	Based on the NYISO 2026 Quarter 1 Short-Term Assessment of Reliability (STAR)	N
33	AC Cable Forced Outage Rates	All existing Cable EFORd's for NYC and LI to reflect most recent ten-year history (2015-2024) (Attachment E4)	All existing Cable EFORd's for NYC and LI to reflect most recent ten-year history (2016-2025) (Attachment E4)	TO provided transition rates with NYISO review Based upon NYSRC recommendation	N
34	UDR Line Unavailability	Ten-year history of forced outages (2015-2024)*	Ten-year history of forced outages (2016-2025)*	NYISO/TO review Based upon NYSRC recommendation	N

*New UDR lines are assigned NYCA average cable outage rates as reflected in Attachment E4

Emergency Operating Procedures

#	Parameter	2026-2027 Model Assumptions	2027-2028 Model Assumptions	Basis for Recommendation	Model Change
35	Special Case Resources (SCRs)	July 2025 – 898.3 MW based on registrations and modeled with maximum capacity of 724.1 MW derated by hourly response rates. Output limitations will be lifted 3 hours prior to the preliminary base case weighted average summer peak net load hour for Load Zones A-F (HB16) and G-K (HB14).	July 2026 – 829.4 MW based on registrations and modeled with maximum capacity of 565.4 MW derated by hourly response rates. Output limitations will be lifted 3 hours prior to the preliminary base case weighted average summer peak net load hour for Load Zones A-F (HB16) and G-K (HB14).	Summer values calculated from July 2026 registrations accounting for updated historical performance	N
36	Other Emergency Operating Procedures (EOPs)	400 MW of 10-min reserves maintained at load shedding. Voluntary Curtailment limited to 3 calls per month. Public Appeals limited to 3 calls per year. 866.8 MW of non-SCR/non-EDRP resources (Attachment D).	450 MW of 10-min reserves maintained at load shedding. Voluntary Curtailment limited to 3 calls per month. Public Appeals limited to 3 calls per year. MW value of non-SCR/non-EDRP resources is expected to be updated in October 2026 (Attachment D).	Based on EOP Review Whitepaper and NYISO updated analysis recommendation Based on TO information, measured data, and NYISO forecasts	N
37	EOP Structure	10 EOP steps modeled	10 EOP steps modeled	Based on agreement with ICS	N

External Control Areas

#	Parameter	2026-2027 Model Assumptions	2027-2028 Model Assumptions	Basis for Recommendation	Model Change
38	PJM	PJM no longer updating their MARS model for NPCC. (Attachment E3)	PJM historical MARS model with load and capacity updated by NPCC CP-8. PJM topology representation unchanged from historical model (Attachment E3)	Based on the PJM representation in the 2025 NPCC Long Range Adequacy Overview (LRAO)	N
39	ISO-NE, Quebec, IESO	ISO-NE Updates: Orrington (BHE to ME) limit, Surowiec (ME to S-ME) limit, S-ME to NH limit, and West-to-East group limit (Attachment E2)	ISO-NE Updates: Surowiec (ME to S-ME) limit and S-ME to NH limit. IESO Update: ONTARIO - HYDRO QUEBEC group limit (Attachment E2)	2025 NPCC LRAO transfer limits for 2026-2030	N
40	External Adjustments per Policy 5	If needed, add load to externals proportional to existing excess capacity.	If needed, add load to externals proportional to existing excess capacity.	Whitepaper on External Control Area adjustments	N
41	Reserve Sharing	All NPCC Control Areas indicate that they will initially share reserves equally among all members and then non-members.	All NPCC Control Areas indicate that they will initially share reserves equally among all members and then non-members.	Per NPCC CP-8 WG	N
42	Emergency Assistance	Statewide emergency assistance allowed from neighbors: Bin 1: 1,470 MW Bin 2: 2,600 MW Bin 3-7: 3,500 MW Winter emergency assistance for HQ is 0 MW (Attachment E5)	Statewide emergency assistance allowed from neighbors: Bin 1: 1,470 MW Bin 2: 2,600 MW Bin 3-7: 3,500 MW Winter emergency assistance for HQ is 0 MW (Attachment E5)	Whitepaper on Modeling of Emergency Assistance for NYCA in IRM studies Based upon NYSRC recommendation	N

Miscellaneous

#	Parameter	2026-2027 Model Assumptions	2027-2028 Model Assumptions	Basis for Recommendation	Model Change
43	MARS Model Version	5.8.3837	5.10.4171	New MARS version completed testing by NYISO	N
44	Environmental Initiatives	No new rules for the 2026-2027 Capability Year	No new rules for the 2027-2028 Capability Year	Review of existing regulations and rules	N

Attachment A1-a

NYCA Summer Load Forecast Coincident and Non-Coincident Peak: 2026-2027 Final Base Case (FBC) and 2027-2028 FBC

2026-2027 IRM FBC													
Area	A	B	C	D	E	F	G	H	I	J	K	NYCA	G_J
NCP - Forecast	3,018.1	1,944.3	2,671.1	671.3	1,313.6	2,330.1	2,350.1	614.6	1,353.6	11,088.8	5,127.8		
CP - Forecast	2,914.4	1,882.3	2,582.1	658.8	1,274.6	2,261.1	2,290.1	599.9	1,321.2	10,824.0	5,039.7	31,648.2	
G-J Peak - Forecast							2,331.3	610.6	1,345.0	11,017.9			15,304.8

2027-2028 IRM FBC													
Area	A	B	C	D	E	F	G	H	I	J	K	NYCA	G_J
NCP - Forecast													
CP - Forecast													
G-J Peak - Forecast													

Delta													
Area	A	B	C	D	E	F	G	H	I	J	K	NYCA	G_J
NCP - Forecast													
CP - Forecast													
G-J Peak - Forecast													

Attachment A1-b

NYCA Winter Load Forecast Coincident and Non-Coincident Peak: 2026-2027 FBC and 2027-2028 FBC

2026-2027 IRM FBC													
Area	A	B	C	D	E	F	G	H	I	J	K	NYCA	G_J
NCP - Forecast	2,342.6	1,572.6	2,523.6	852.0	1,358.0	1,930.0	1,677.0	536.0	953.0	7,647.4	3,327.4		
CP - Forecast	2,314.6	1,561.6	2,513.6	827.0	1,330.0	1,917.0	1,672.0	525.0	947.0	7,597.4	3,314.4	24,522.6	
G-J Peak - Forecast							1,667.0	523.0	943.0	7,642.4			10,775.4

2027-2028 IRM FBC													
Area	A	B	C	D	E	F	G	H	I	J	K	NYCA	G_J
NCP - Forecast													
CP - Forecast													
G-J Peak - Forecast													

Delta													
Area	A	B	C	D	E	F	G	H	I	J	K	NYCA	G_J
NCP - Forecast													
CP - Forecast													
G-J Peak - Forecast													

Attachment A2

NYCA Summer Load Forecast Uncertainty Model: 2026 and 2027

Load Forecast 2026

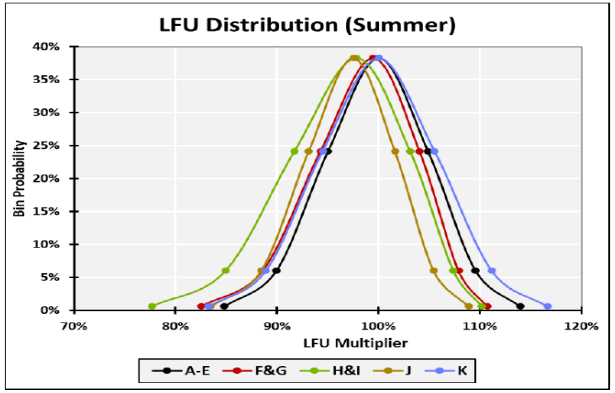

Bin	Bin z	Bin Probability	A-E	F&G	H&I	J	K
Bin 1	2.74	0.62%	113.93%	110.69%	110.18%	108.88%	116.62%
Bin 2	1.79	6.06%	109.54%	107.86%	107.34%	105.42%	111.14%
Bin 3	0.89	24.17%	104.86%	104.04%	103.09%	101.61%	105.52%
Bin 4	0.00	38.29%	100.00%	99.46%	97.81%	97.51%	100.00%
Bin 5	-0.89	24.17%	95.00%	94.29%	91.70%	93.12%	94.48%
Bin 6	-1.79	6.06%	89.91%	88.61%	84.93%	88.45%	88.89%
Bin 7	-2.74	0.62%	84.79%	82.53%	77.65%	83.48%	83.27%

Load Forecast 2027

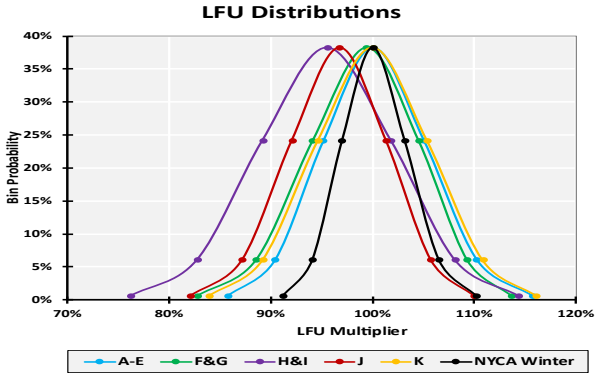

Bin	Bin Z	Bin Probability	A-E	F&G	H&I	J	K
Bin 1	2.74	0.62%	115.67%	113.59%	114.35%	109.93%	116.11%
Bin 2	1.79	6.06%	110.22%	109.24%	108.10%	105.70%	110.83%
Bin 3	0.89	24.17%	105.01%	104.48%	101.82%	101.30%	105.37%
Bin 4	0.00	38.29%	100.00%	99.41%	95.52%	96.75%	100.00%
Bin 5	-0.89	24.17%	95.14%	94.09%	89.17%	92.04%	94.63%
Bin 6	-1.79	6.06%	90.38%	88.53%	82.74%	87.16%	89.20%
Bin 7	-2.74	0.62%	85.73%	82.77%	76.23%	82.09%	83.93%

Attachment A3

NYCA Winter Load Forecast Uncertainty Model: 2026 and 2027

Bin	Bin z	Bin Probability	NYCA (2026-2027 IRM)	NYCA (2027-2028 IRM)	Difference
1	2.74	0.62%	110.48%	110.19%	-0.29%
2	1.79	6.06%	106.68%	106.52%	-0.16%
3	0.89	24.17%	103.22%	103.15%	-0.07%
4	0.00	38.29%	100.00%	100.00%	0.00%
5	-0.89	24.17%	96.96%	96.99%	0.03%
6	-1.79	6.06%	94.02%	94.06%	0.04%
7	-2.74	0.62%	91.16%	91.17%	0.01%

Attachment A4

Annual Energy Forecast by Zone:

Annual Energy Forecast by Zone - GWh												
	A	B	C	D	E	F	G	H	I	J	K	NYCA
2026-2027 IRM FBC	16,124.0	9,600.6	14,302.7	5,620.0	7,190.0	11,240.0	9,590.0	2,790.0	5,910.0	50,252.4	20,376.3	152,996.0
2027-2028 IRM FBC												
Delta												

Attachment B1

New Thermal Units and Unit Re-Ratings

Project or Generator Name	Zone	2026 Gold Book CRIS (MW)	2026 Gold Book DMNC (MW)	New or Incremental (MW)	2027-2028 IRM Study Model (MW)
New Units					
Curtis/Palmer (Hydro)	F	0	0	58.8	58.8
Reactivations					
Shoreham 2	K	18.5	16.7	0	16.7
Total New Units and Uprates (MW)				58.8	75.5

Attachment B2

Deactivations and Removals

Unit Removal since 2026-2027 IRM Study			
Generator Name	**Type**	**Zone**	**Summer CRIS (MW)**
High Acres	IC	C	9.6
Dahowa Hydroelectric*	HY	F	10.5
Albany LFGE*	IC	F	4.5
Danskammer 1 through 4	ST	G	493.5
Total Removals			**518.1**

* ICAP Ineligible Forced Outage (IIFO)

Attachment B3

New Intermittent Resources

Resource	Zone	CRIS (MW)	Summer Capability (MW)	Lesser of Summer Capability vs. CRIS (MW)
Wind				
Alle Catt II Wind*	A	339.1	339.1	339.1
Total Wind		**339.1**	**339.1**	**339.1**

Solar				
Excelsior Energy Center*	B	280	280	280
Cider Solar*	B	500	500	500
Ticonderoga Solar*	F	20	20	20
Total Solar		**800**	**800**	**800**

*Units do not have an approved Summer DMNC test as of publication, and so have been assumed to have Summer Capabilities equal to their CRIS

Attachment B4

New Energy Storage Resources

Resource	Zone	CRIS (MW)	Summer Capability (MW)	Lesser of Summer Capability vs. CRIS (MW)
New Battery Units				
Orangeville ESR*	C	10	10	10
Astoria Energy Storage*	J	100	100	100
Total New Energy Storage		**110**	**110**	**110**

*Units do not have an approved Summer DMNC test as of publication, and so have been assumed to have Summer Capabilities equal to their CRIS

Attachment B5

Resources in the Behind-the-Meter Net Generation (BTM:NG) Resource Program*

Generator Name	Zone	Resource Value (MW)**	Peak Load Adjustment (MW)***
Existing			
Stony Brook	K	0.0	40.1
Greenidge 4	C	99.2	33.9
Lyons Falls Hydro	E	0.0	0.0
KIAC_JFK	J	122.8	17.4
Red Rochester	B	76.1	51.5
Oxbow (Fortistar - N.Tonawanda)	A	55.7	1.5
Total BTM:NG		**353.8**	**144.4**

* The IRM study independently models the generation and load components of BTM:NG Resources.
** Based on adjusted Dependable Maximum Gross Capability (DMGC) value.
*** Based on Average Coincident Host Load (ACHL).

Attachment B6

Distributed Energy Resources

Capacity Region	Aggregation Type(s)	ICAP (MW)
A-E	Demand Side Resource (DSR)	340.0
F	-	0
G-I	-	0
J	Demand Side Resource (DSR)	0.5
K	-	0
Total Distributed Energy Resources		**340.5**

Attachment C1

NYCA Five-Year Annual Derating Factors – All Resources

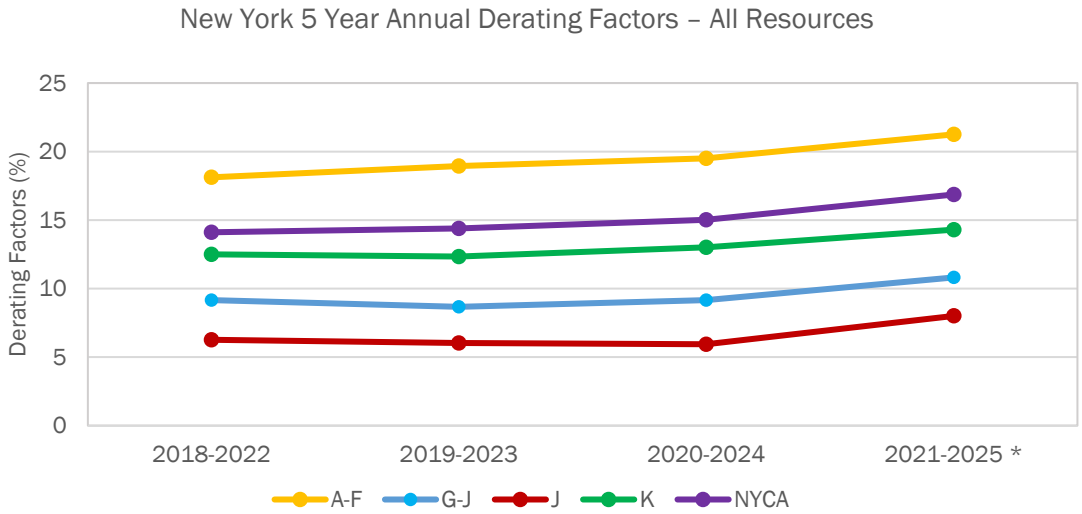

* Starting from the 2027-2028 IRM PBC, the study will use annualized derating factors combining summer and winter derating factors

Attachment C2-a

NYCA Five-Year Seasonal Derating Factors – All Resources

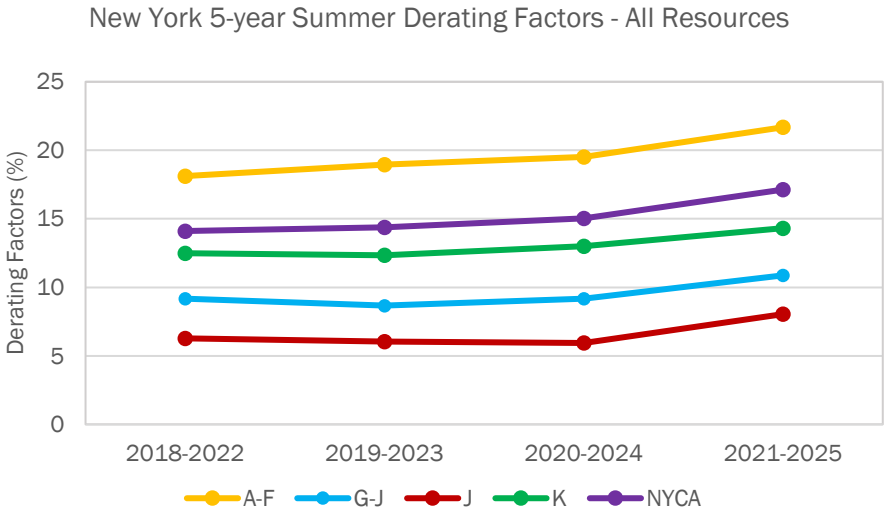

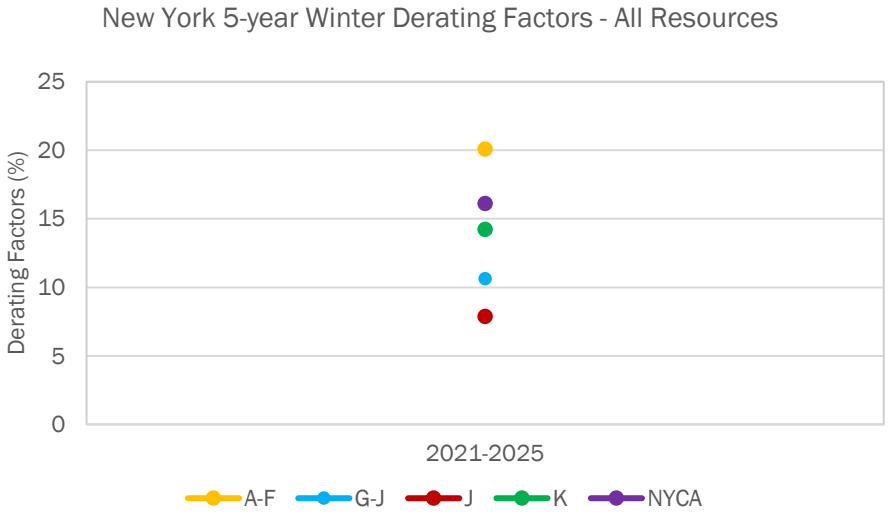

Attachment C2-b

NYCA Five-Year Seasonal Derating Factors - Intermittent Power Resources*

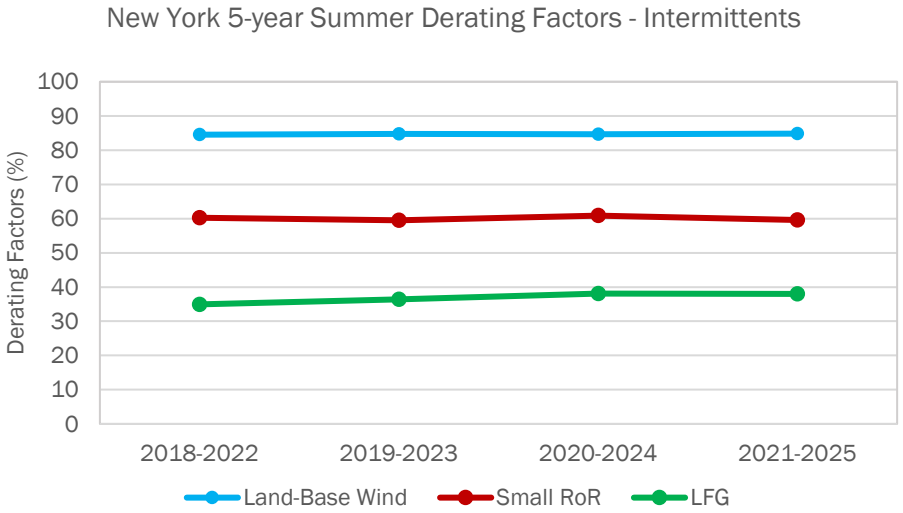

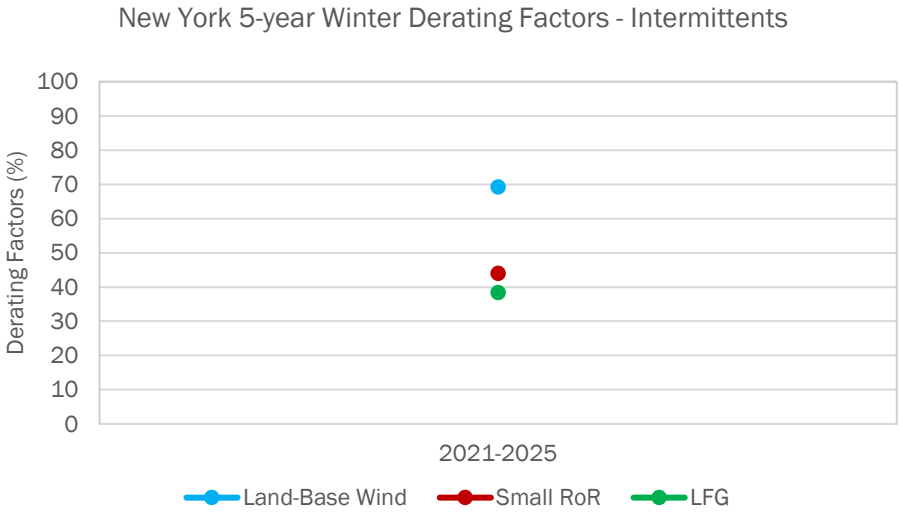

* Solar will be added when there are at least 3 units using production data for all 5 years of the average

Attachment D

Emergency Operating Procedures*

Step	Procedure	2026-2027 IRM MW Value	2027-2028 IRM MW Value
1	Special Case Resources – Load, Gen	898.3 MW Enrolled / 724.1 MW Modeled	Enrolled: 829.4 MW (S) / 500.7 MW (W)** Modeled: 565.4 MW (S) / 341.3 MW (W)**
2	5% manual voltage Reduction	64.58 MW	(Expected October 2026)
3	Thirty-minute reserve to zero	655 MW	655 MW
4	Voluntary industrial curtailment	267.12 MW Limited to 3 calls per month	231.05 MW Limited to 3 calls per month
5	General Public Appeals	74 MW Limited to 3 calls per year	74 MW Limited to 3 calls per year
6	5% remote voltage reduction	461.06 MW	(Expected October 2026)
7	Emergency Purchases	Varies	Varies
8	Ten-minute reserves to zero	910 MW (400 MW maintained at load shedding)	860 MW (450 MW maintained at load shedding)
9	Customer disconnections	As needed	As needed
10	Adjustment used if IRM is lower than technical study margin	As needed	As needed

* Ordering of EOP steps reflect the sequence followed by NYISO Grid Operations
** While the model includes monthly values, the Summer MW values represent model values for July and the Winter MW values represent model values for January

Attachment E1

IRM Topology

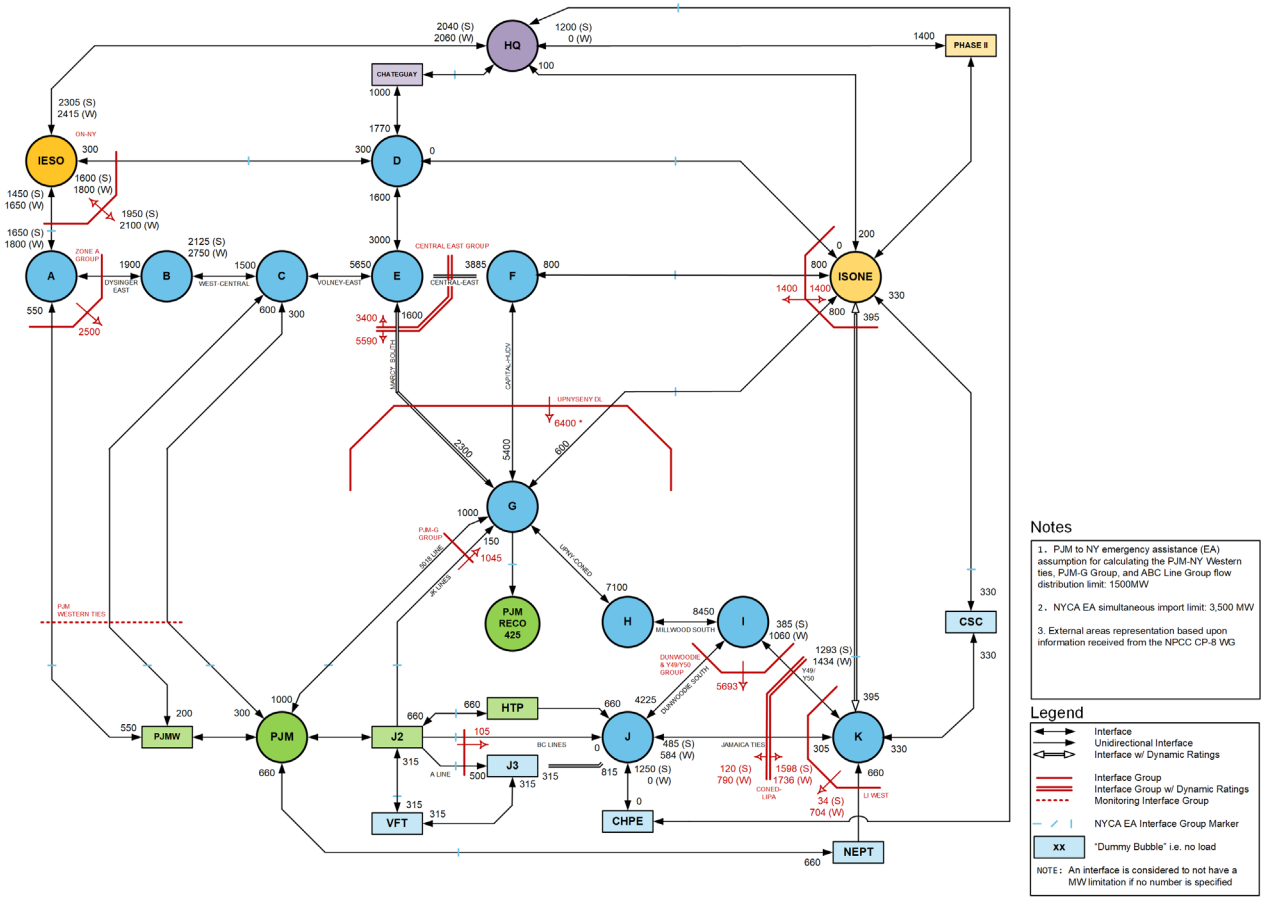

Notes

1. PJM to NY emergency assistance (EA) assumption for calculating the PJM-NY Western ties, PJM-G Group, and ABC Line Group flow distribution limit: 1500MW

2. NYCA EA simultaneous import limit: 3,500 MW

3. External areas representation based upon information received from the NPCC CP-8 WG

Legend

- Interface
- Unidirectional Interface
- Interface w/ Dynamic Ratings
- Interface Group
- Interface Group w/ Dynamic Ratings
- Monitoring Interface Group
- NYCA EA Interface Group Marker
- xx "Dummy Bubble" i.e. no load

NOTE: An interface is considered to not have a MW limitation if no number is specified

New York ISO

Attachment E2

ISO-NE 14 Bubble Model

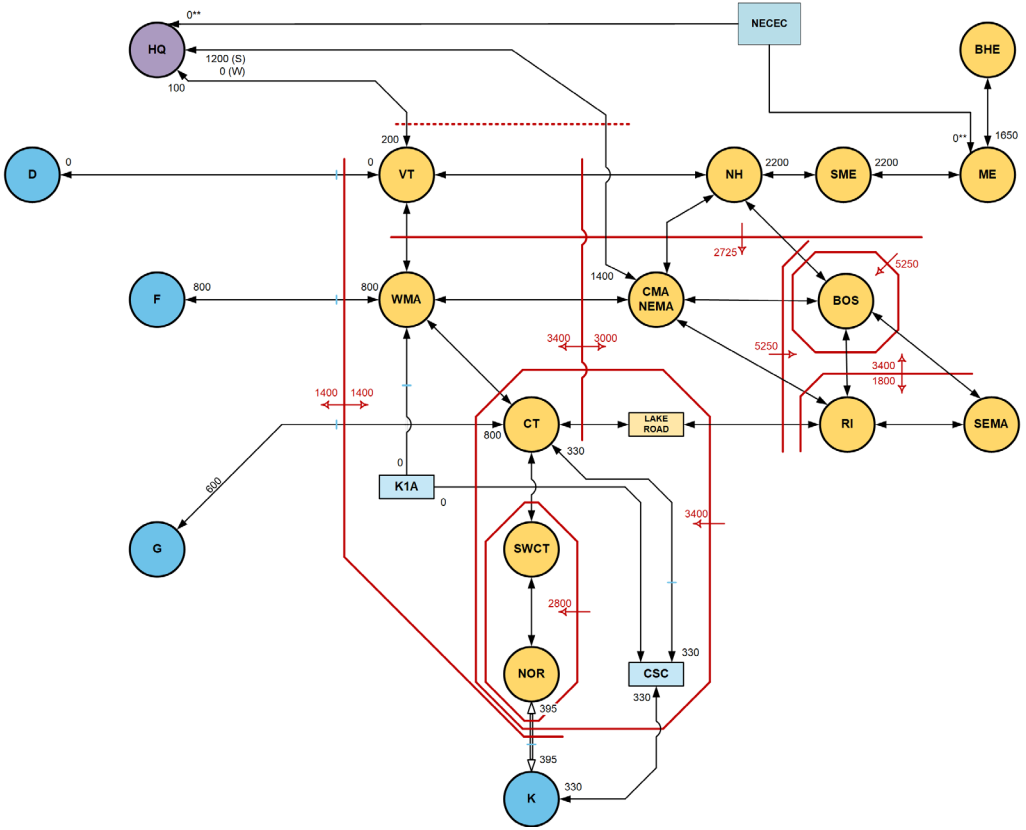

**Note: The tie does not currently hold any capacity network import interconnection service

Attachment E3

PJM Bubble Model

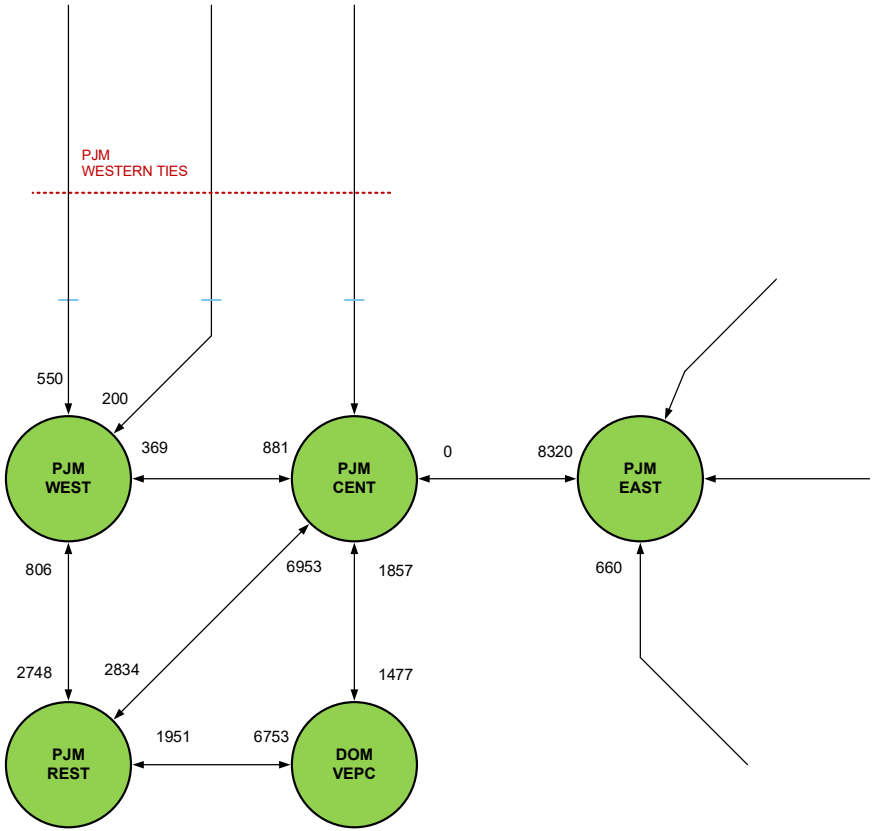

Attachment E4

10-year average Cable Outage Rate	
2015-2024	2016-2025
5.80%	5.83%

The facilities included in these averages are VFT, HTP, Dunwoodie-South, Y49/Y50, CSC, Neptune, Norwalk-Northport, A-Line, and Champlain Hudson Power Express.

Attachment E5

Dynamic Emergency Assistance (EA) Interface Group Limits (MW)							
Area	**Bin 1**	**Bin 2**	**Bin 3**	**Bin 4**	**Bin 5**	**Bin 6**	**Bin 7**
IESO	550	660	750	860	Maximum EA (1,950)		
ISONE	50	540	1,000	1,530	Maximum EA (1,804)		
PJM*	580	1,110	Maximum EA (1,415)				
HQ	280 Summer and 0 Winter						
Total EA**	1,470	2,600	Maximum EA (3,500)				

Dynamic EA PJM Cable Limits (MW)***							
Area	**Bin 1**	**Bin 2**	**Bin 3**	**Bin 4**	**Bin 5**	**Bin 6**	**Bin 7**
HTP	54	104	Maximum EA (660)				
Neptune	54	104	Maximum EA (660)				
VFT	26	50	Maximum EA (315)				
A Line	8	17	Maximum EA (105)				

* PJM ties limits are only applicable to A, C, and G ties, and individual cables are derated separately, in proportion to the Bin 1 and Bin 2 PJM interface group limits listed above

** The total EA limit from all ties are derived from a separate regression analysis and may not match the sum of all group tie limits in each LFU bin

*** Limiting EA, does not affect contract capacity over UDRs

Attachment F

SCR Determinations 2026-2027 Model Assumptions and 2027-2028 IRM Studies

SCR Performance for 2026-2027 IRM Study									
Super Zones	SCR Enrollments (MW)	Response Rate (%) by Hour of SCR Activation							Superzonal ACL to CBL Translation Factor (%)
		Event Hour 1	Event Hour 2	Event Hour 3	Event Hour 4	Event Hour 5	Event Hour 6	Event Hour 7	
A - E	260.5	82.33%	85.85%	85.54%	79.20%	75.61%	0%	0%	91.85%
F	87.8	72.95%	79.54%	82.43%	83.29%	83.40%	70.40%	66.99%	89.18%
G - I	73.9	61.08%	69.85%	72.12%	73.52%	74.47%	71.50%	0%	83.46%
J	453.0	57.53%	62.61%	66.97%	70.70%	72.29%	66.09%	0%	72.92%
K	23.1	51.20%	57.99%	63.12%	65.49%	64.82%	63.35%	52.63%	75.13%
All Zones	898.3	66.77%	72.08%	74.61%	74.35%	73.83%	66.38%	58.14%	

SCR Performance for 2027-2028 IRM Study									
Super Zones	SCR Enrollments (MW)	Response Rate (%) by Hour of SCR Activation							Superzonal ACL to CBL Translation Factor (%)
		Event Hour 1	Event Hour 2	Event Hour 3	Event Hour 4	Event Hour 5	Event Hour 6	Event Hour 7	
A - E	212.5	80.10%	81.88%	82.19%	79.84%	75.66%	75.39%	72.38%	88.33%
F	58.0	67.35%	72.68%	75.33%	76.08%	75.25%	67.77%	63.18%	80.35%
G - I	65.0	59.62%	68.22%	72.04%	73.67%	73.38%	70.14%	67.15%	72.78%
J	468.4	54.95%	59.70%	64.62%	69.61%	70.67%	67.83%	66.25%	58.78%
K	25.6	51.75%	58.25%	62.71%	65.18%	64.86%	64.31%	61.02%	70.45%
All Zones	829.4	65.70%	69.82%	72.67%	74.15%	72.89%	70.64%	68.37%	

Attachment G

Wind Units Modeled

Resource	Zone	CRIS (MW)	Summer Capability (MW)	Lesser of Summer Capability vs. CRIS (MW)
Arkwright Summit Wind Farm [WT]	A	78.4	78.4	78.4
Ball Hill Wind [WT]	A	100.0	107.5	100.0
Bliss Wind Power [WT]	A	102.5	100.5	100.5
Erie Wind [WT]	A	15.0	15.0	15.0
Steel Wind [WT]	A	20.0	20.0	20.0
Alle Catt II Wind *	A	339.1	339.1	339.1
Baron Winds (Phase 1 and 2) [WT]	C	300.0	238.8	238.8
Canandaigua Wind Power [WT]	C	125.0	125.0	125.0
Eight Point Wind Energy Center [WT]	C	101.2	101.2	101.2
High Sheldon Wind Farm [WT]	C	112.5	118.1	112.5
Howard Wind [WT]	C	57.4	55.4	55.4
Orangeville Wind Farm [WT]	C	94.4	93.9	93.9
Wethersfield Wind Power [WT]	C	126.0	126.0	126.0
Altona Wind Power [WT]	D	99.5	97.5	97.5
Chateaugay Wind Power [WT]	D	106.5	106.5	106.5
Clinton Wind Power [WT]	D	102.5	100.5	100.5
Ellenburg Wind Power [WT]	D	83.0	81.0	81.0
Jericho Rise Wind Farm [WT]	D	77.7	77.7	77.7
Marble River Wind [WT]	D	215.2	209.1	209.1
Bluestone Wind [WT]	E	124.2	111.8	111.8
Hardscrabble Wind [WT]	E	74.0	74.0	74.0
Maple Ridge Wind [WT01]	E	231.0	231.0	231.0
Maple Ridge Wind [WT02]	E	90.7	90.8	90.7
Munnsville Wind Power [WT]	E	34.5	34.5	34.5
Number 3 Wind Energy [WT]	E	105.8	103.9	103.9
Roaring Brook [WT]	E	79.7	79.7	79.7
South Fork Wind Farm (Offshore)	K	136.0	132.0	132.0
Total		**3,131.8**	**3,048.9**	**3,035.7**

*Unit does not have an approved Summer DMNC test as of publication, and so has been assumed to have Summer capability equal to its CRIS

Attachment G1

Wind Units Not Currently Participating in ICAP Market

Resource	Zone	Nameplate (MW)	CRIS (MW)	Summer Capability (MW)	Lesser of Summer Capability vs. CRIS (MW)
Fenner Wind [WT]	C	30.0	0.0	0.0	0.0
Marsh Hill Wind Farm [WT]	C	16.2	0.0	0.0	0.0
Copenhagen Wind [WT]	E	79.9	0.0	0.0	0.0
Cassadaga Wind [WT]	A	126.5	0.0	0.0	0.0
Total		**252.6**	**0.0**	**0.0**	**0.0**

Attachment G2

Solar Units Modeled

Resource	Zone	CRIS (MW)	Summer Capability (MW)	Lesser of Summer Capability vs. CRIS (MW)
Excelsior Energy Center*	B	280.0	280.0	280.0
Cider Solar*	B	500.0	500.0	500.0
Janis Solar [PV]	C	20.0	20.0	20.0
Morris Ridge Solar Energy Center	C	177.0	177.0	177.0
Puckett Solar [PV]	C	20.0	20.0	20.0
Albany County	F	20.0	20.0	20.0
Albany County II	F	20.0	20.0	20.0
Branscomb Solar [PV]	F	20.0	20.0	20.0
Darby Solar [PV]	F	20.0	20.0	20.0
East Point Solar	F	50.0	50.0	50.0
Grissom Solar [PV]	F	20.0	20.0	20.0
High River Solar	F	90.0	90.0	90.0
Pattersonville Solar [PV]	F	20.0	20.0	20.0
Regan Solar [PV]	F	20.0	20.0	20.0
ELP Stillwater Solar [PV]	F	20.0	20.0	20.0
Ticonderoga Solar*	F	20	20	20
Calverton Solar Energy Center [PV]	K	22.9	22.9	22.9
Long Island Solar Farm [PV]	K	31.5	31.5	31.5
Total		**1,371.4**	**1,371.4**	**1,371.4**

*Units do not have an approved Summer DMNC test as of publication, and so have been assumed to have Summer capabilities equal to their CRIS

Attachment G3

Solar Units Not Modeled

Resource	Zone	CRIS (MW)	Summer Capability (MW)	Lesser of Summer Capability vs. CRIS (MW)
Shoreham Solar [PV]*	K	25.0	0.0	0.0
Total		**25.0**	**0.0**	**0.0**

*Unit provides power at the distribution level rather than at the transmission level.

Attachment G4

Landfill Gas (LFG) Units Modeled

Resource	Zone	CRIS (MW)	Summer Capability (MW)	Lesser of Summer Capability vs. CRIS (MW)
Chaffee [IC]	A	6.4	6.4	6.4
Model City Energy LFGE [IC]	A	5.6	5.6	5.6
Modern LFGE [IC]	A	6.4	6.4	6.4
Mill Seat [IC]	B	6.4	6.4	6.4
Broome 2 [IC]	C	2.0	2.1	2.0
Broome LFGE [IC]	C	2.1	2.4	2.1
Ontario LFGE [IC]	C	11.2	11.2	11.2
Seneca Energy Group [IC] (23797)	C	17.6	17.6	17.6
Clinton LFGE [IC]	D	6.4	6.4	6.4
DANC LFGE [IC]	E	6.4	6.4	6.4
Oneida-Herkimer LFGE [IC]	E	3.2	3.2	3.2
Colonie LFGTE [IC]	F	6.4	6.4	6.4
Fulton County Landfill [IC]	F	3.2	3.2	3.2
Total		**83.3**	**83.7**	**83.3**

Attachment G5

Landfill Gas (LFG) Units Not Modeled

Resource	Zone	CRIS (MW)	Summer Capability (MW)	Lesser of Summer Capability vs. CRIS (MW)
Chautauqua LFGE	A	9.6	0.0	0.0
Synergy Biogas	B	2.0	0.0	0.0
Total		**11.6**	**0.0**	**0.0**

Attachment G6

Energy Storage Resources

Resource	Zone	CRIS (MW)	Summer Capability (MW)	Lesser of Summer Capability vs. CRIS (MW)
KCE NY 6	A	20.0	20.0	20.0
Orangeville ESR*	C	10.0	10.0	10.0
Pomona ESR	G	3.0	3.0	3.0
Arthur Kill Energy Storage 1	J	15.0	15.0	15.0
Astoria Energy Storage*	J	100.0	100.0	100.0
Total		**148.0**	**148.0**	**148.0**

*Units do not have an approved Summer DMNC test as of publication, and so have been assumed to have Summer capabilities equal to their CRIS

Attachment G7

Fuel Availability Constraints

Tier	Percentage of NYCA Baseline Forecasted Winter Peak Load	Fuel Availability Data *			MARS Model Parameters				
		Available Gas (MW)	Available Oil (MW)	Total Available Fuel (MW) (Gas + Oil)	Modeled ICAP (MW)	Unavailable ICAP (MW) **			
						F	G	J	K
1	>106.25%	675	11,550	12,225	20,726	2,015	1,528	2,660	910
2	105% +/- 1.25%	1,350		12,900		1,321	1,528	2,660	910
3	102.5% +/- 1.25%	2,775		14,325		135	1,460	2,493	840
4	100% +/- 1.25%	4,000		15,550		48	1,172	1,791	546
5	97.5% +/- 1.25%	5,050		16,600		19	789	1,202	373
6	<96.25%	No Constraint				No Constraint			

* Note: Available fuel data is in terms of UCAP. Derates are applied to the generator ICAP.
** Note: Values represent aggregate level derate applied to generator ICAP. Actual derate % applied varies depending on the fuel type (i.e., gas-only vs. dual fuel) of each unit

Assumption Matrix History

Date	Ver	Preliminary Base Case	Date	Ver	Final Base Case
02/04/2026	V0.0	Initial Version with no assumption update	09/02/2026	V0.0	Updated Items 24, 35, and Attachments B6, D, F
03/04/2026	V1.0	Updated item 43	09/29/2026	V1.0	Updated Items 6a, 6b, 8, 9, 16, 31, 36 and Attachments B1, B2, B3, C1, C2-a, C2-b, D, E1, E2, G2, G4, G7
06/03/2026	V2.0	Updated Items 1a, 1b, 5a, 15a, 15b, 17, 18, 19, 21, 24, 35, 36, 37 and Attachments A1-a, A1-b, A4, B5, B6, D, and F			
07/08/2026	V3.1	Items 2a, 2b, 3, 4a, 4b, 6a, 6b, 7-14, 16, 20, 22, 23, 25-34, 36, 38-42, and Attachments A2, A3, B2, B3, B4, C1, C2a, C2b, D, E1, E2, E4, E5, G, G1, G2, G4, G5, G6, G7			